Pb Process Capable

RoHS Compliant 2002/95/EC

REV.	ECN. NO.	APPD.

DIMENSIONS

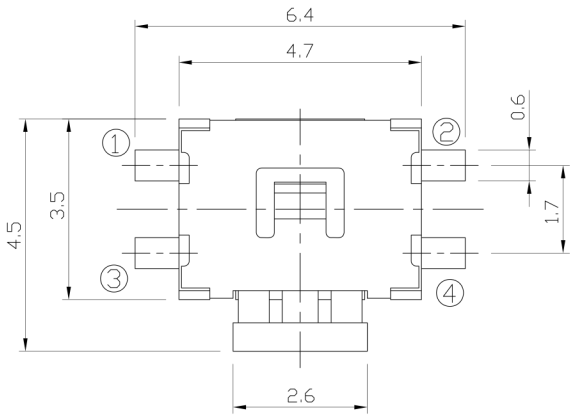

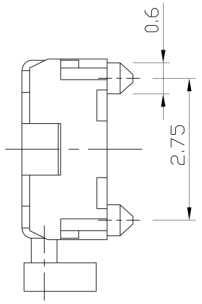

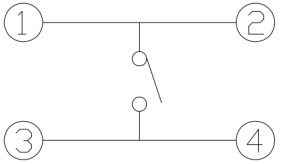

CIRCUIT DIAGRAM

Tenx 腾兴

P.C.B MOUNTING PATTERN DIMENSION

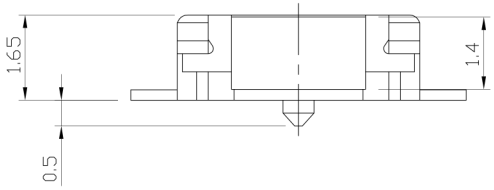

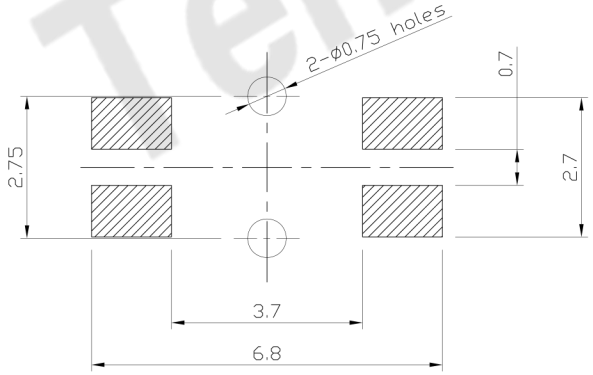

ELECTRO-MECHANICAL CHARACTERISTICS

Refer to additional specifications

RATING	DC12V 50mA
CONTACT RESISTANCE	100mΩ MAX.
TRAVEL	0.3±0.1mm
OPERATING FORCE	220±50gf
OPERATING LIFE(cycles)	100,000

NO.	PARTS	MATERIAL	Q'TY	FINISHING
8				
7				
6				
5				
4				
3				
2				
1				

.X ±0.3 | X. ±3°

UNITS mm

MAT'L SEE NOTE

FINISH SEE NOTE

Q'TY

THESE DRAWINGS AND SPECIFICATIONS ARE THE PROPERTY OF ACCURATE INNOTECH INC AND SHALL NOT BE REPRODUCED, COPIED OR USED IN ANY MANNER WITHOUT THE PRIOR WRITTEN CONSENT OF ACCURATE INNOTECH INC.

东莞市腾兴电子有限公司

TITLE: TACT SWITCH

PART NO.: AT-1189E SERIES

DR: Ricky 2015/05/07

CHKD: Ricky 2015/05/07

APPD:

DWG NO.: AKS-1189E

SCALE	SHEET	REV.	
1:1	1/1	A	CUSTOMER DRAWING