Pb Process Capable

RoHS Compliant 2002/95/EC

REV.	ECN. NO.	APPD.

DIMENSIONS

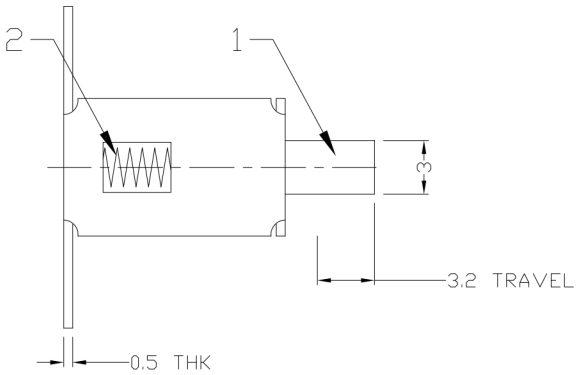

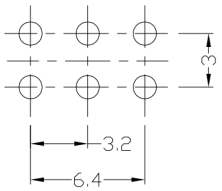

P.C.B LAYOUT

BOTTOM VIEW

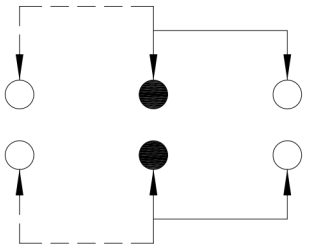

CIRCUIT DIAGRAM

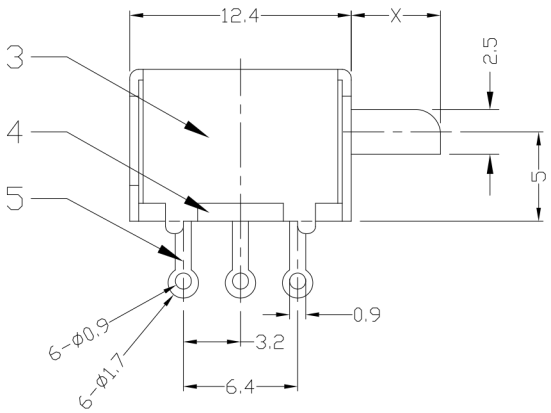

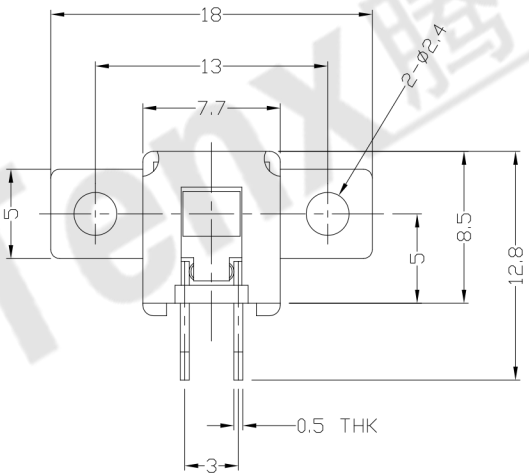

ELECTRO-MECHANICAL CHARACTERISTICS

Refer to additional specifications

RATING	DC50V 0.3A
CIRCUIT	2P2T
CONTACT RESISTANCE	100mΩ MAX.
TIMING	NON-SHORTING
OPERATING MODE	NON-LOCK
STROKE	FULL 3.2mm
OPERATING FORCE	100±30gf
OPERATING LIFE(cycles)	10,000

Tenx 腾兴

NO.	PARTS	MATERIAL	Q'TY	FINISHING
8				
7				
6	CONTACT CLIP	PBS STRIP	2	Ag PLATED
5	TERMINAL	BRASS STRIP	6	Ag PLATED
4	BASE	PHENOLIC RESIN	1	NATURAL
3	FRAME	STEEL STRIP	1	Ni PLATED
2	SPRING	STEEL WIRE	1	NATURAL
1	KNOB	POM	1	BLACK

WITHIN 1.5mm:±0.1mm

OVER 1.5mm:±0.2mm

THESE DRAWINGS AND SPECIFICATIONS ARE THE PROPERTY OF ACCURATE INNOTECH INC AND SHALL NOT BE REPRODUCED, COPIED OR USED IN ANY MANNER WITHOUT THE PRIOR WRITTEN CONSENT OF ACCURATE INNOTECH INC.

UNITS mm

MAT'L SEE NOTE

FINISH SEE NOTE

Q'TY

东莞市腾兴电子有限公司

TITLE: PUSH SWITCH / HORIZONTAL

PART NO.: AP-22F14N

DR: Ricky 2015/03/31

CHKD: Ricky 2015/03/31

APPD:

DWG NO.: ADL-22F14

SCALE	SHEET	REV.	
2:1	1/1	A	CUSTOMER DRAWING