Pb Process Capable

RoHS Compliant 2002/95/EC

REV.	ECN. NO.	APPD.

DIMENSIONS

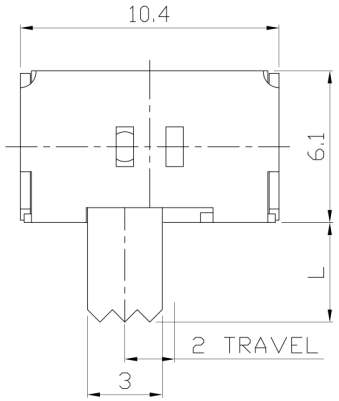

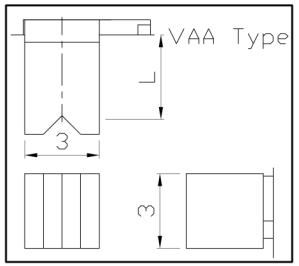

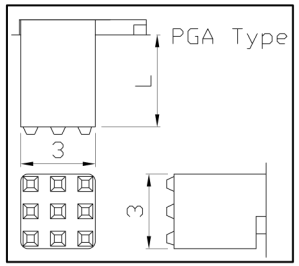

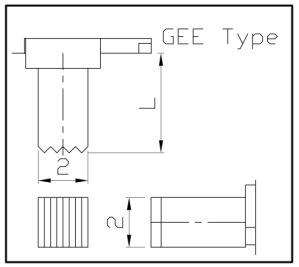

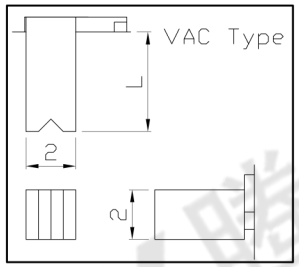

MODEL CODE

SK-22D12-GEI□

Knob Type
GEI
VAA
PGA
GEE
VAC

L(mm)
~

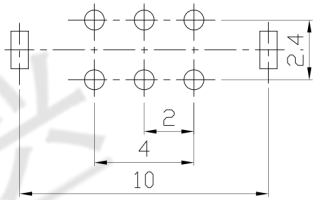

P.C.B LAYOUT

BOTTOM VIEW

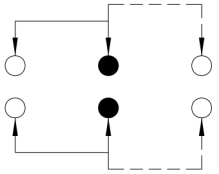

CIRCUIT DIAGRAM

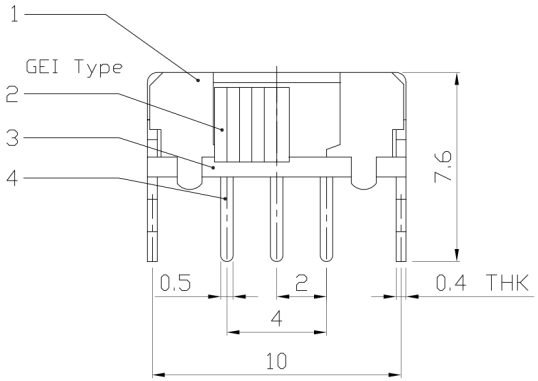

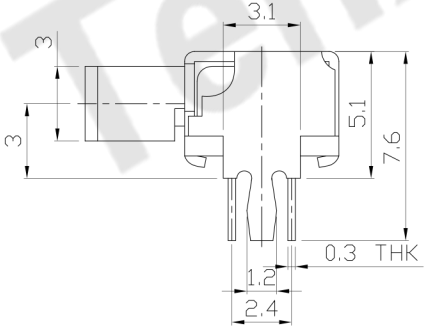

ELECTRO-MECHANICAL CHARACTERISTICS

Refer to additional specifications

RATING	0.3A 30V DC
CIRCUIT	2P2T
CONTACT RESISTANCE	30mΩ MAX.
TIMING	SHORTING
TRAVEL	2mm
OPERATING FORCE	200±100gf
OPERATING LIFE(cycles)	10,000

NO.	PARTS	MATERIAL	Q'TY	FINISHING
8				
7				
6	CONTACT CLIP	PBS C5210R-EH	2	Ag CLAD
5	SPRING PLATE	STAINLESS STEEL	1	NATURAL
4	TERMINAL	BRASS STRIP	6	Ag PLATED OVER Ni PLATED
3	BASE	PHENOLIC RESIN	1	NATURAL
2	KNOB	POM	1	BLACK
1	FRAME	STEEL STRIP	1	Ni PLATED

WITHIN 1.5mm: ±0.1mm

OVER 1.5mm: ±0.2mm

THESE DRAWINGS AND SPECIFICATIONS ARE THE PROPERTY OF ACCURATE INNOTECH INC AND SHALL NOT BE REPRODUCED, COPIED OR USED IN ANY MANNER WITHOUT THE PRIOR WRITTEN CONSENT OF ACCURATE INNOTECH INC.

UNITS mm

MAT'L SEE NOTE

FINISH SEE NOTE

Q'TY

东莞市腾兴电子有限公司

TITLE: SLIDE SWITCH / HORIZONTAL

PART NO.: SK-22D12

DR: Ricky 2015/12/11

CHKD: Ricky 2015/12/11

APPD:

DWG NO.: ADJ-22D12

SCALE	SHEET	REV.	
4:1	1/1	A	CUSTOMER DRAWING

Tenx 腾兴