Pb Process Capable

RoHS Compliant 2002/95/EC

REV.	ECN. NO.	APPD.

DIMENSIONS

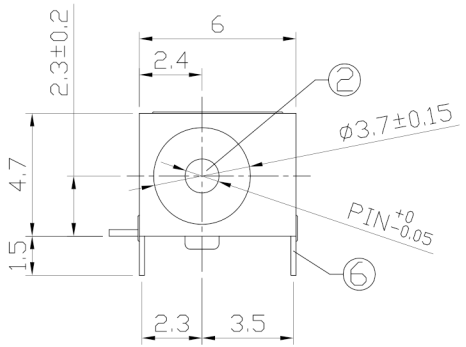

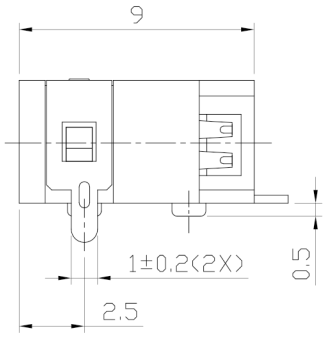

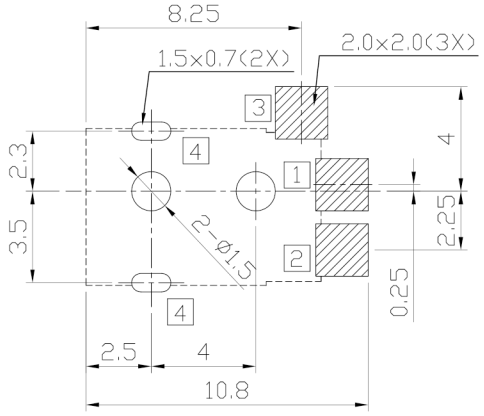

RECOMMENDED P.C.B. LAYOUT
UNSPECIFIED TOLERANCE:±0.05
(TOP-SIDED VIEW)

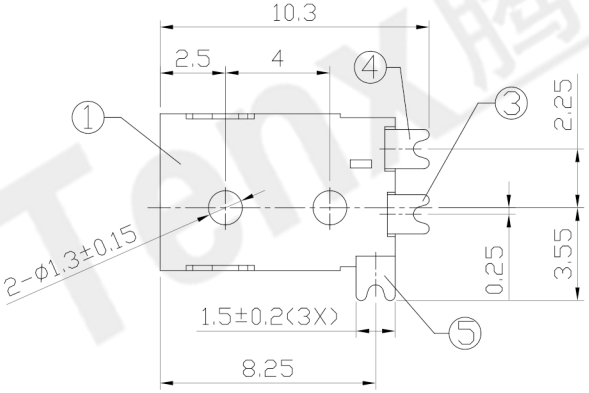

MODEL CODE:

DCB0-0045A- A □ LC BK S 0 1

(1) (2) (3)(4) (5) (6)(7)(8) (9)

(1):Series type:SMD DC POWER JACK.
(2):Series No.
(3):Schematic option: A
(4):Center pin diameter:
A=⌀1.0, E=⌀1.3
(5):Material of housing:
LC=LCP(Standard)
(6):Housing color:
BK=Black
(7):Terminal plating:
S=Silver(Ag)
(8):Special option:
0=No special option
(9):Packing mode:
1=Reel packing
3=Plastic box packing

Specification:
1.Rating : DC 12V 1A.
2.Contact resistance: ≤30mΩ
After test:≤50mΩ
3.Insulation resistance: ≥100MΩ (500VDC).
After test:≥50MΩ
4.Withstanding voltage: 500VAC.
5.Insertion and extraction force: 3N~30N.
6.life test: 5000cycles min.
7.Operation temperature range:-20℃~70℃
8.Preservative temperature range:-40℃~85℃

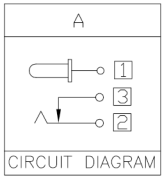

CIRCUIT DIAGRAM

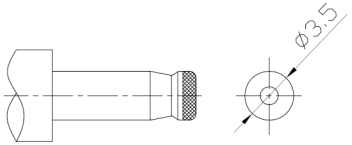

DC MATE PLUG

Model No.	C	E
CENTER PIN	⌀1.0	⌀1.3

◯: ITEM NO. □: TERMINAL NO.

NO.	PARTS	MATERIAL	Q'TY	FINISHING
⑥	Shield plate 4	Brass t0.2	1	Tin plating
⑤	Shunt terminal 3	Brass t0.25	1	Silver plating
④	Tip spring 2	Beryllium bronze t0.3	1	Silver plating
③	Center pin terminal 1	Brass t0.2	1	Silver plating
②	Center pin 1	Brass	1	CuSn/Nickel plating
①	Housing	LCP,UL 94V-0	1	Black

TOLERANCE	ANGLES
±0.3	±2°

THESE DRAWINGS AND SPECIFICATIONS ARE THE PROPERTY OF ACCURATE INNOTECH INC AND SHALL NOT BE REPRODUCED, COPIED OR USED IN ANY MANNER WITHOUT THE PRIOR WRITTEN CONSENT OF ACCURATE INNOTECH INC.

UNITS mm
MAT'L SEE NOTE
FINISH SEE NOTE
Q'TY

东莞市腾兴电子有限公司

TITLE: SMD DC POWER JACK
PART NO.: DCB0-0045A
DR: Ricky 2018/06/20
DWG NO.: AB0-0045A
CHKD: Ricky 2018/06/20
APPD:

SCALE	SHEET	REV.	CUSTOMER DRAWING
1:1	1/1	A	

Tenx 腾兴