| REV. | ECN. NO. | APPD. |
|---|---|---|
| | | |
| | | |
| | | |

Pb Process Capable

RoHS Compliant 2002/95/EC

Halogen Free

# DIMENSIONS

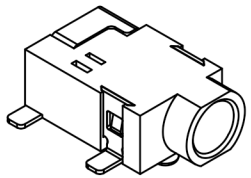

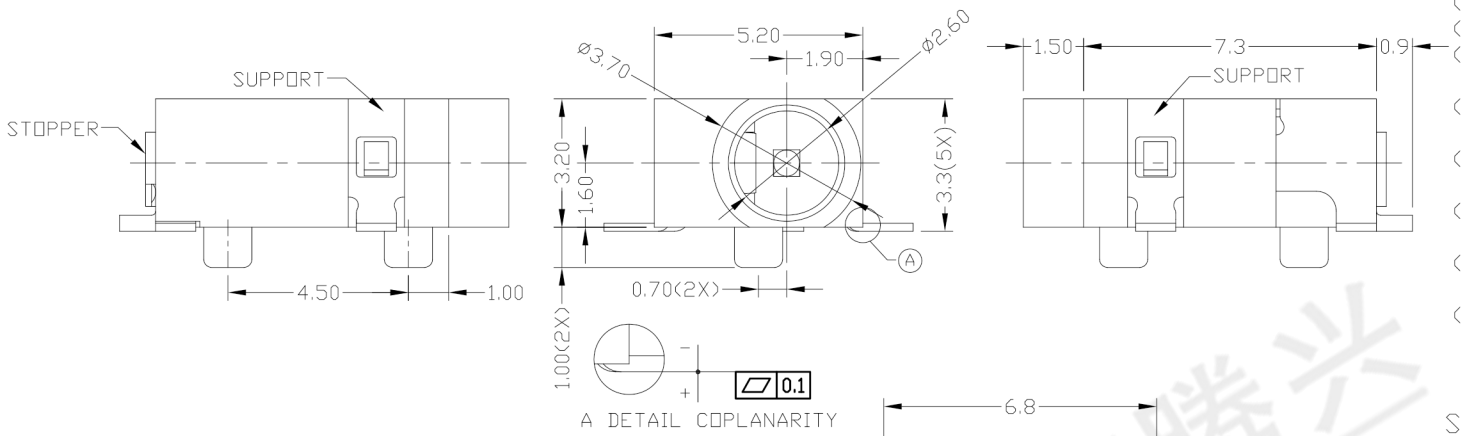


MODEL CODE:

DCTO-00065D- A A 10 BK S 0 1

(1) (2) (3)(4)(5) (6) (7)(8) (9)

(1):Series type:SMD DC POWER JACK.
(2):Series No.
(3):Schematic option: A
(4):Center pin diameter:
A=ø0.65mm
(5):Material of housing:
10=PA10T
(6):Housing color:
BK=Black
(7):Terminal plating:
S=Silver(Ag)
(8):Special option:
0=No special option
(9):Packing mode:
1=Reel packing

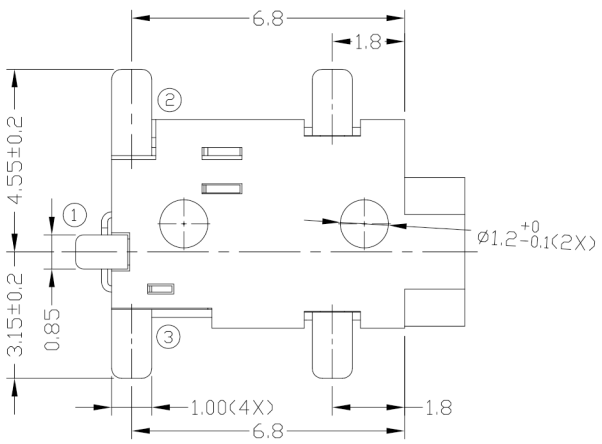


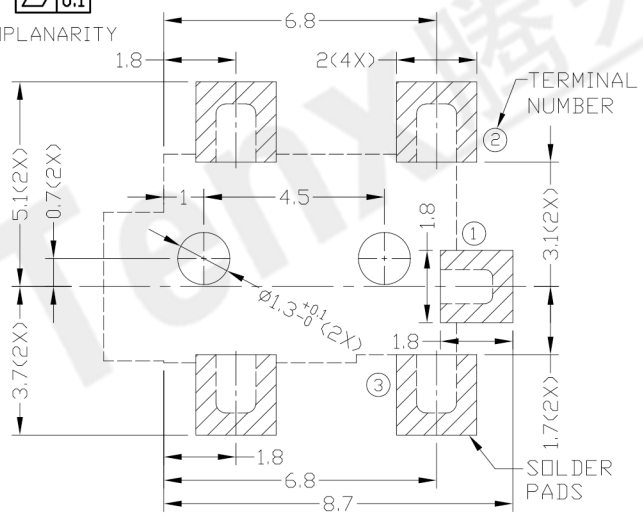


RECOMMENDED P.C.B. LAYOUT
TOLERANCE:±0.05
(TOP VIEW)

Specification:

1.Rating : 1A/16V DC Max.
2.Contact resistance: ≤30mΩ
After test:≤60mΩ
3.Insulation resistance: ≥100MΩ (DC500V).
After test:≥50MΩ
4.Withstanding voltage: 500VAC.
5.Insertion and extraction force: 0.3~3Kgs..
6.Life test: 5,000cycles min.
7.Operation temperature range:-25℃~85℃.

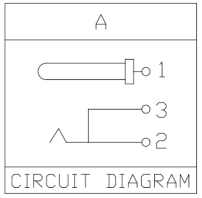


| MODEL NO. | A |
|---|---|
| CENTER PIN | ø0.65mm |

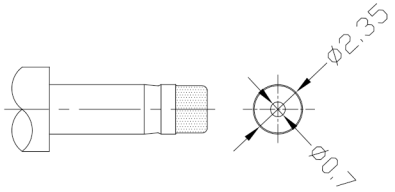


DC MATE PLUG

Bill of materials:

| NO. | PARTS | MATERIAL | Q'TY | FINISHING |
|---|---|---|---|---|
| 6 | TERMINAL 1 | BRASS | 1 | SILVER PLATED |
| 5 | TERMINAL 2 | COPPER ALLOY | 1 | SILVER PLATED |
| 4 | TERMINAL 3 | BRASS | 1 | SILVER PLATED |
| 3 | SUPPORT | BRASS | 1 | SILVER PLATED |
| 2 | STOPPER | STAINLESS STEEL | 1 | |
| 1 | HOUSING | PA10T | 1 | UL94V-0 |

| TOLERANCE | ANGLES |
|---|---|
| ±0.3 | ±2° |

UNITS mm
MAT'L SEE NOTE
FINISH SEE NOTE
Q'TY

THESE DRAWINGS AND SPECIFICATIONS ARE THE PROPERTY OF ACCURATE INNOTECH INC AND SHALL NOT BE REPRODUCED, COPIED OR USED IN ANY MANNER WITHOUT THE PRIOR WRITTEN CONSENT OF ACCURATE INNOTECH INC.

东莞市腾兴电子有限公司

| TITLE: | PART NO.: |
|---|---|
| SMD DC POWER JACK | DCTO-00065D |
| DR: Ricky 2018/10/03 | DWG NO.: ATO-00065D |
| CHKD: Ricky 2018/10/03 | |
| APPD: | |

| SCALE | SHEET | REV. | CUSTOMER DRAWING |
|---|---|---|---|
| 1:1 | 1/1 | A | |

Tenx 腾兴